120 Volt PRIORI Series T2 Under Cabinet Light
Installation Instructions for 043T Hardwire Series using line voltage

WARNING: These products may represent a possible shock or fire hazard if improperly installed or attached in any way. Products should be installed in accordance with the owners manual, current electrical codes and/or the current National Electric Code (NEC).

Warning: To avoid electric shock, disconnect power prior to installation.
Caution: Injury to persons and damage to the lamp and/or mounting surface may result if the lamp is pulled from the surface. To reduce the likelihood of such injury or damage, mount on a surface that is mechanically sound.

1. Pull the lens cover away from the front edge of the fixture gently rotating toward the back of the fixture. The lens cover will now be open at a 90° angle to the base of the fixture. (Figure 1)
2. Remove the lens cover from housing gently by sliding each end of the lens toward the front of the unit while holding at 90°, then closing to about 30° and lifting the metal tab up through the slot in the end cap. (Figure 1, inset)
3. Place fixture in desired location and mark the position of the mounting holes.
4. Set fixture housing aside and start mounting screws at marks leaving a $^1/_4$" space between surface and screw head.
5. To gain access to wires contained inside the wiring compartment, push the metal "Quick Clips" in succession with thumb while holding and lifting off the wiring compartment cover. (Figure 2)
6. Locate and remove whichever knockout is most conveniently located to your 120V power supply. Knockouts are located on the back and the top of the fixture. (Figure 3)

Figure 1

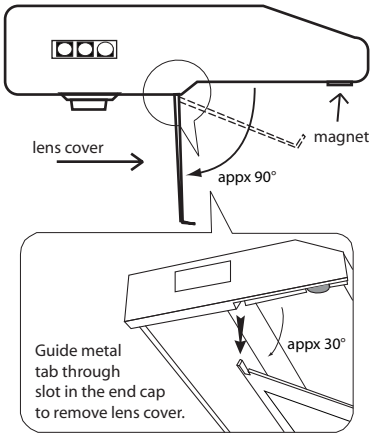

Supply wires connection:

1. Slip fixture housing over mounting screws along keyhole slots where they narrow to hold fixture in place and allow magnet on front of housing to hold wiring compartment cover up for "hands-free" wiring.
2. Tighten mounting screws to secure housing in place.
3. Install cable connecter that is appropriate for the supply wire following National Electric Code and local codes.
4. Install cable following National Electric Code and local building code requirements. AC supply should be 120V protected by circuit breaker or fuse.
5. Connect line voltage AC supply wire(s) (Black) to the line voltage AC wire(s) (Black) inside the fixture. Secure the connection using the quick connector provided.
6. Connect the neutral AC supply wire(s) (White) to the neutral AC wire(s) White inside the fixture. Secure the connection using the quick connector provided.
7. Connect the ground AC supply wire(s) (Green or bare wire) to the ground AC wire(s) (Green) inside the fixture. Secure the connection using the quick connector provided. If your system has no ground wire, you should consult a qualified electrician before proceeding with the installation. Note: Electric shock, overheating, low or no light output and shortened lamp life can result if proper grounding is not done.
8. Insure that no wires are exposed after making the electrical connections.
9. Arrange the wires inside the fixture so they will fit under the wiring compartment cover.
10. Take wiring compartment cover from magnet's hold and tilt it so that back edge slides under back lip of housing. Push wiring compartment cover firmly until it snaps into place, held by the metal "Quick Clips". Note: Be sure that the wires are not pinched or damaged by any part of the housing or the cover.

Figure 2

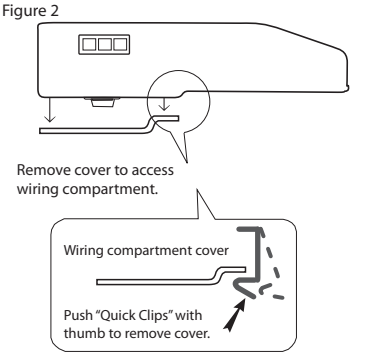

Install the T2 lamp provided:

Fluoresent T2 (replacement lamp is 043T-F06/30 for 10", 043T-F08/30 for 14", 043T-F13/30 for 22", 043T-F18/30 for 28" and 043T-F24/30 for 32"). Hold lamp with narrowed ends running vertically to align with socket and gently press lamp into socket until seated.

Replace the lens cover:

While holding the lens cover at 90° to the fixture, insert the small metal tab of the lens cover that corresponds to the non-slotted holding area into place first. Close the 90° angle to about 30° and align the other small metal tab with the slot on the other end and insert. Gently push the sides of the lens toward the back of the unit until the lens holding tabs snap into place. Close the cover by rotating the lens 90° until it snaps tightly to magnetic closure. Do not operate without lens cover in place.

Figure 3

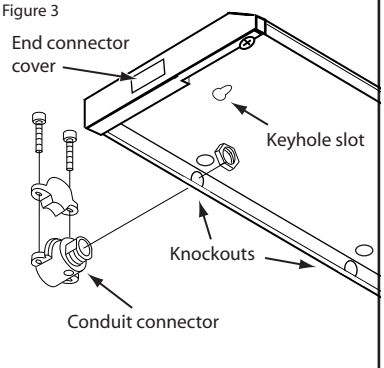

RV0811-KB

ADDITIONAL SAFETY MEASURES:

1. Bulb becomes hot quickly. Only contact switch when turning on or off fixture.
2. Do not touch hot lens, lens holder or enclosure.
3. Do not look directly at lighted bulb.
4. Keep lamp away from flammable materials.
5. Do not operate lamp with missing or damaged lens.
6. Do not operate without end connector cover in place for any molex ports/connectors not in use.

AMERICAN LIGHTING
BRIGHT IDEAS • INNOVATIVE PRODUCTS