Enigma®

Ceiling Fan

Suitable for use with Solid State Speed Controls
WARNING: Support Directly From Building Structure

Net Weight 38 lbs. or 17.3 kg.

Model No. FP2120** Series

OWNER'S MANUAL

READ AND SAVE THESE INSTRUCTIONS

FANIMATION

For Canada, this fan must be secured directly to the building structure or ceiling joist.
Don't secure this fan to an outlet box.

Important Safety Instructions

WARNING: To avoid fire, shock and serious personal injury, follow these instructions.

1. Read your owner's manual and safety information before installing your new fan. Review the accompanying assembly diagrams.
2. Before servicing or cleaning unit, switch power off at service panel and lock service panel disconnecting means to prevent power from being switched on accidentally. When the service disconnecting means cannot be locked, securely fasten a warning device, such as a tag, to the service panel.
3. Be careful of the fan and blades when cleaning, painting, or working near the fan. Always turn off the power to the ceiling fan before servicing.
4. Do not insert anything into the fan blades while the fan is operating.
5. Do not operate reversing switch until fan blades have come to a complete stop.

Additional Safety Instructions

1. To avoid possible shock, be sure electricity is turned off at the fuse box before wiring, and do not operate fan without blades.
2. All wiring and installation procedures must satisfy National Electrical Codes (ANSI/ NFPA 70-1999). Use the National Electrical Code if Local Codes do not exist. The ceiling fan must be grounded as a precaution against possible electrical shock. Electrical installation should be made or approved by a licensed electrician.
3. The fan base must be securely mounted and capable of reliably supporting at least 50 lbs. Outlet boxes are not acceptable for fan support. See page 5 of owner's manual for support requirements. Consult a qualified electrician if in doubt.
4. **CAUTION:** To reduce the risk of personal injury, mount the fan base to a ceiling joist or structural member using the hardware provided with your fan.

WARNING: Support Directly from Building Structure.

5. The fan must be mounted with the fan blades at least 7 feet from the floor to prevent accidental contact with the fan blades.
6. Follow the recommended instructions for the proper method of wiring your ceiling fan. If you do not have adequate electrical knowledge or experience, have your fan installed by licensed electrician.
7. Suitable for use with solid-state speed controls.

WARNING: To reduce the risk of fire or electric shock, this fan should only be used with Fan Speed Control Part No. UC7051R, manufactured by Rhine Electronic Co., Ltd.

WARNING: TO REDUCE THE RISK OF SHOCK, THIS FAN MUST BE INSTALLED WITH AN ISOLATING WALL CONTROL/SWITCH.

WARNING: This product is designed to use only those parts supplied with this product and/or accessories designated specifically for use with this product. Using parts and/or accessories not designated for use with this product could result in personal injury or property damage.

WARNING: To reduce the risk of personal injury, do not bend the blade bracket (flange or blade holder) when installing the brackets, balancing the blades, or cleaning the fan. Do not insert foreign objects in between rotating fan blades.

LIMITED LIFETIME WARRANTY

Extends to the original purchaser of a Fanimation Fan

1. LIMITED LIFETIME MOTOR WARRANTY - If any part of your fan motor fails, due to a defect in materials or workmanship during the lifetime of the original purchaser, Fanimation will provide the replacement part free of charge, when the defective fan is returned to our national service center. Proof of purchase is required. Customer shall be responsible for all costs incurred in the removal or reinstallation and shipping of the product for repairs or replacement.
2. ONE YEAR MOTOR LABOR WARRANTY - If your fan motor fails at any time within one year from the original purchase, due to defects in materials or workmanship, labor to repair the motor will be provided free of charge at our national service center. Purchaser will be responsible for labor charges after this one-year period. Customer shall be responsible for all costs incurred in the removal or reinstallation and shipping of the product for repairs or replacement.
3. If any other part of your fan fails at any time within one year after original purchase, due to a defect in materials or workmanship, we will repair, or replace, at our option, the defective part free of charge for parts and labor performed at our national service center.
4. Because of varying climate conditions, this warranty does not cover changes in the finish, including rusting, pitting, corroding, tarnishing, or peeling.
5. This warranty is void and does not apply to damage from improper installation, neglect, accident, misuse, exposure to extremes of heat or humidity, or as a result of any modification to the original product.
6. All costs of removal and reinstallation of the fan are the sole responsibility of the owner of the fan and not the store that sold the fan or Fanimation.
7. Fanimation reserves the right to modify or discontinue any product at any time and may substitute any part under this warranty.
8. Under no circumstances may a fan be returned without prior authorization from Fanimation. The receipt of purchase must accompany authorized returns and must be sent freight prepaid to Fanimation. The fan to be returned must be properly packed to avoid damage in transit; Fanimation will not be responsible for any damage resulting from improper packaging.
9. It is understood that any repair or replacement is the exclusive remedy available from Fanimation. There is no other expressed or implied warranty. Fanimation hereby disclaims any and all implied warranties, including, but not limited to those of merchantability and fitness for a particular purpose to the extent permitted by law. Some states do not allow limitations on implied warranties. Fanimation will not be liable for incidental, consequential, or special damages arising out of or in conjunction with product use or performance, except as may otherwise be accorded by law. This warranty gives you special legal rights and you may also have other rights that vary from state to state.
10. A certain amount of wobble is normal and should not be considered a problem or a defect.

Table of Contents

Unpacking Instructions 3
Electrical and Structural Requirements 4
How to Assemble Your Ceiling Fan 4
How to Hang Your Ceiling Fan 6
How to Wire Your Ceiling Fan - C4T Hand-held Remote 7
Operating Instructions - C4T Hand-held Remote 7
Installing the Canopy Housing 8
Final Assembly - Options 8
Maintenance 9
Trouble Shooting 9
Parts List 10
Exploded-View Illustration 11

This Manual is Designed to Make it as Easy as Possible for You to Assemble, Install, Operate, and Maintain Your Ceiling Fan

Tools Needed for Assembly

- One Phillips head screwdriver
- One stepladder
- One ¼" blade screwdriver
- 9⁄16" Socket head wrench
- One wire stripper

⚠ WARNING

Before assembling your ceiling fan, refer to section on proper method of wiring your fan (page 4). If you feel you do not have enough wiring knowledge or experience, have your fan installed by a licensed electrician.

Materials

Wiring outlet box and box connectors must be of type required by local code. The minimum wire would be a 3-conductor (2-wire with ground) of the following size:

Installed Wire Length	Wire Size A.W.G.
Up to 50 ft.	14
50 - 100 ft.	12

NOTE: *Place the parts from the loose parts bags in a small container to keep them from being lost. If any parts are missing, contact your local retailer.*

Unpacking Instructions

For your convenience, check-off each step. As each step is completed, place a check mark. This will ensure that all steps have been completed and will be helpful in finding your place should you be interrupted.

⚠ WARNING

Do not install or use fan if any part is damaged or missing. This product is designed to use only those parts supplied with this product and/or any accessories designated specifically for use with this product by Fanimation. Substitution of parts or accessories not designated for use with this product by Fanimation could result in personal injury or property damage. Contact your retail store for missing or damaged parts.

Check to see that you have received the following parts:

- Ceiling Fan assembly
- Downrod/Hanger Ball assembly
- Ceiling Canopy
- Hanger Bracket
- Motor Coupling Cover
- Hardware bag:
  - Four wire connectors
  - Two 5/32" threaded rods
  - Two 5/32" lockwashers
  - Two 5/32" knurled knobs
- Support Cable bag:
  - Ceiling Support Cable
  - Cable Clamp
  - ⅜" x 2" lag bolt
  - ⅜" flat washer
- Lower Cover Assembly
- Lower Cap
- TR4 Fan & Light Transmitter Remote
- Remote Receiver Unit

NOTE: *If you are uncertain of part description, refer to exploded view illustration. (Figure 1, page 11)*

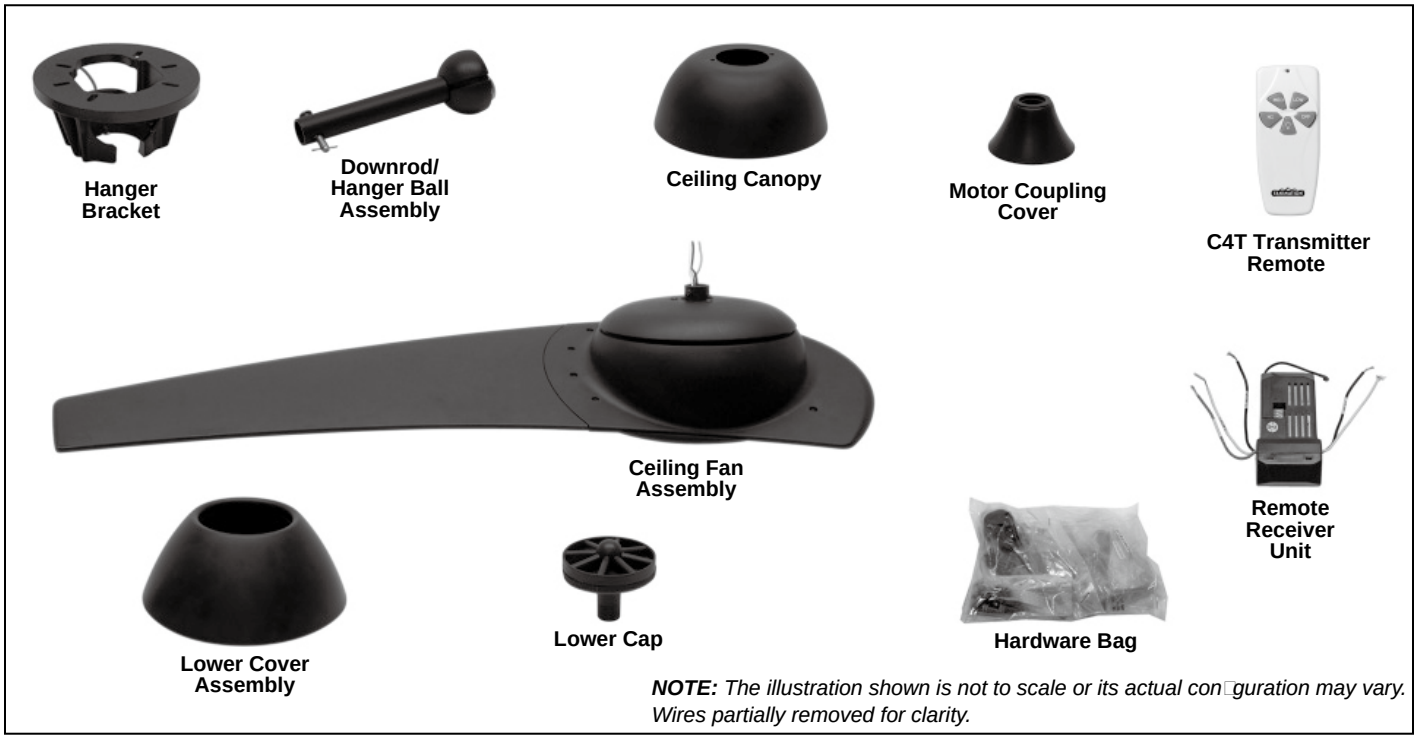

NOTE: *The illustration shown is not to scale or its actual con□guration may vary. Wires partially removed for clarity.*

Electrical and Structural Requirements

Your new ceiling fan will require a grounded electrical supply line of 120 volts AC, 60 Hz, 15 amp circuit. The outlet box must be securely anchored and capable of withstanding a load of at least 50 lbs. Figure 1 depicts different structural configurations that may be used for mounting the outlet box.

⚠ WARNING

To reduce the risk of fire, electrical shock, or personal injury, mount fan to outlet box marked acceptable for fan support of 22.7 kg (50 lbs) or less. Use screws supplied with outlet box. Most outlet boxes commonly used for support of light fixtures are not acceptable for fan support and may need to be replaced. Consult a qualified electrician if in doubt.

If your fan is to replace an existing light fixture, turn electricity off at the main fuse box at this time and remove the existing light fixture.

⚠ WARNING

Turning off wall switch is not sufficent. To avoid possible electrical shock, be sure electricity is turned off at the main fuse box before wiring. All wiring must be in accordance with National and Local codes and the ceiling fan must be properly grounded as a precaution against possible electrical shock.

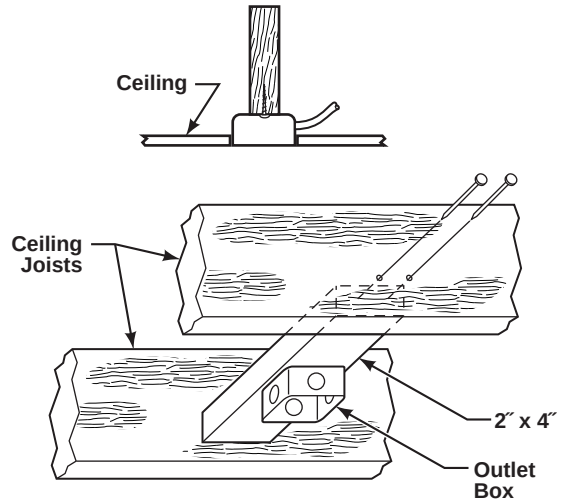

Figure 1

⚠ WARNING

To avoid fire or shock, follow all wiring instructions carefully. Any electrical work not described in these instructions should be done or approved by a licensed electrician.

How to Assemble Your Ceiling Fan

1. To prevent damage to housing and/or blade, leave the Ceiling Fan Assembly in its original packing during installation of lower cover assembly, down rod, ceiling canopy and motor coupling cover.

NOTE: *Do not set Ceiling Fan Assembly on floor or hard surface.*

2. Prior to assembly, set aside and save the hardware bag(s) packed in the packing.

3. Assemble the Lower Cover Assembly by connecting the 2-pin (black & white wires) socket connector to the plug connector (blue & white wires). Be sure the connector wires are inside the Control Housing before assembling the Lower Cover Assembly. (Figure 1)

4. Locate and loosen two Indexing Screws located on the Control Housing. (Figure 1) Line up the indexing holes over the screws, secure by twisting the Lower Cover Assembly clockwise and tighten the two indexing screws. (Figure 2)

5. Turn the Ceiling Fan Assembly (in package) top-side up for installing down rod, ceiling canopy and motor coupling cover.

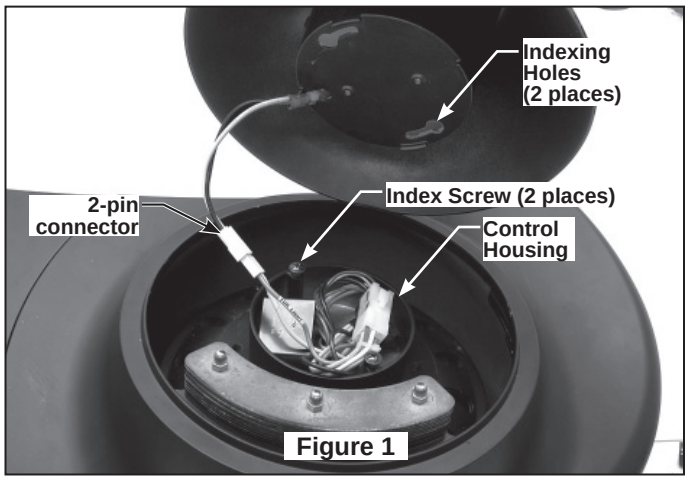

Figure 1

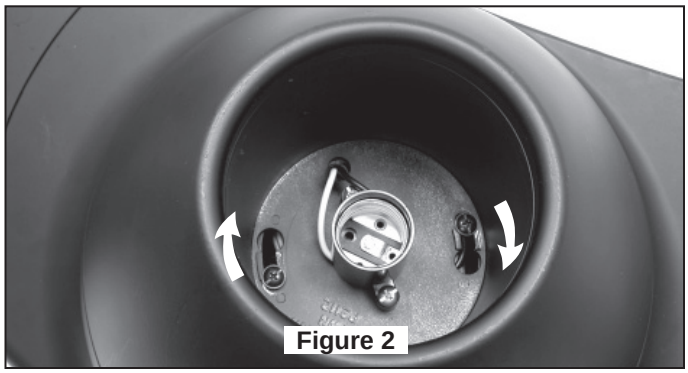

Figure 2

6. Remove the Hanger Ball by loosening the setscrew in the Hanger Ball until the ball falls freely down the Downrod. (Figure 3a) Remove the Pin from the Downrod, then remove the Hanger Ball. Retain the Pin and Hanger Ball for reinstallation in Step 9.

7. Separate and untwist the three wires and the safety cable. Route the leads through the Downrod.

8. Loosen the two setscrews in the Downrod Support. Align the Clevis Pin holes in the Downrod with the holes in the Downrod Support. Install the Clevis Pin and secure with the Hairpin Clip. (Figure 3b)

9. Pass the Downrod/Hanger Ball Assembly through the top of the ceiling canopy and push the bell-shaped motor coupling cover on to the downrod as shown. (Figure 4)

NOTE: *You will be using either the 6" downrod supplied with your fan or an optional downrod purchased seperately.*

⚠ WARNING

It is critical that the clevis pin in the downrod support is properly installed and the setscrews are securely tightened. Failure to verify that the pin and setscrews are properly installed could result in the fan falling.

10. Loosen the two setscrews in the downrod support. Align the clevis pin holes in the downrod with the holes in the downrod support. Install the clevis pin and secure with the hairpin clip (Figure 3). The clevis pin must go through the holes in the downrod support and the holes in the downrod. Be sure to push the straight leg of the hairpin clip through the hole near the end of the clevis pin until the curved portion of the hairpin clip snaps around the clevis pin. The hairpin clip must be properly installed to prevent the clevis pin from working loose. Pull on the hanger ball to make sure the clevis pin is properly installed.

11. While pulling up on the hanger ball, securely tighten the two setscrews in the downrod support (Figure 3).

NOTE: *The setscrews must be properly installed as described above, or fan-wobble could result.*

12. Slide the motor coupling cover down until it touches the top of the motor.

13. The fan comes with a support cable, blue, black, orange and white leads. Before installing fan, measure up approximately 6-9 inches above top of Downrod/ Hanger Ball Assembly. Cut off excess cable and wire. Strip back insulation ½" from end of each wire.

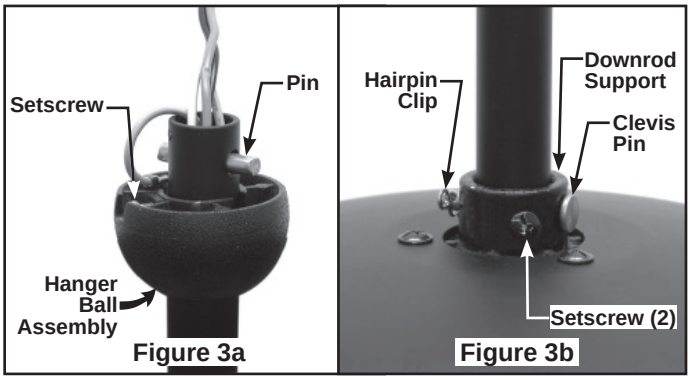

Figure 3a Figure 3b

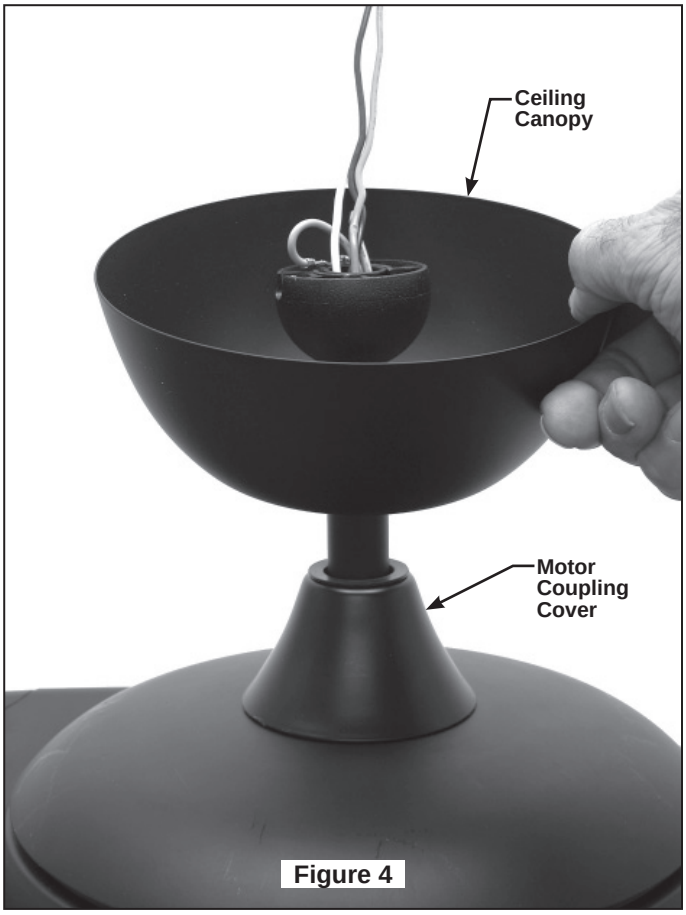

Figure 4

14. You have now completed the assembly of your new ceiling fan. You can now proceed with the hanging and the electrical wiring of your fan.

How to Hang Your Ceiling Fan

⚠ WARNING

To avoid possible electrical shock, be sure electricity is turned off at the main fuse box before hanging.
NOTE: If you are not sure if the outlet box is grounded, contact a licensed electrician for advice, as it must be grounded for safe operation.

⚠ WARNING

The fan must be hung with at least 7´ of clearance from floor to blade (Figure 1)

1. Securely attach the ceiling support cable to the ceiling joist or structural member using the ⅜´´ x 2´´ lag bolt and flat washer. The lag bolt will pass through the flat washer, loop of the ceiling support cable, the outlet box and into the supporting member (Figure 2). You will first drill a ¼´´ pilot hole into the supporting member to prevent splitting or cracking.

2. Securely attach the hanger bracket to ceiling junction box **acceptable for ceiling support.**

NOTE: *Ceiling support cable cannot be secured to junction box only, it must be directly secured to ceiling joist or structural member* using the ⅜´´ x 2´´ lag bolt and flat washer. *(Figure 2).*

INSTALLATION NOTE

If you are installing your ceiling fan on a sloped ceiling, the hanger bracket must be mounted with the opening parallel to the slope.

INSTALLATION NOTE

Be sure that the safety cable (along with the electrical supply wires) is pulled through the downrod when installing the downrod.

3. Make sure the electrical supply wires, including the hanger bracket grounding wire and safety cable are pulled through the downrod, between the hanger bracket and the junction box so that electrical connections can be made later.

4. Carefully lift the fan and seat the downrod/hanger ball assembly on the hanger bracket that was just attached to the ceiling joist. Be sure the groove in the ball is lined up with tab on the hanger bracket. (Figure 3)

5. Attach the safety cable to ceiling support cable. Slide cable clamp onto safety cable (from fan). Place the end of cable through the loop of ceiling support cable. Pull as much cable through loop as possible. Feed end of cable into clamp hole and firmly tighten screw (Figure 3). Cut off excess safety cable.

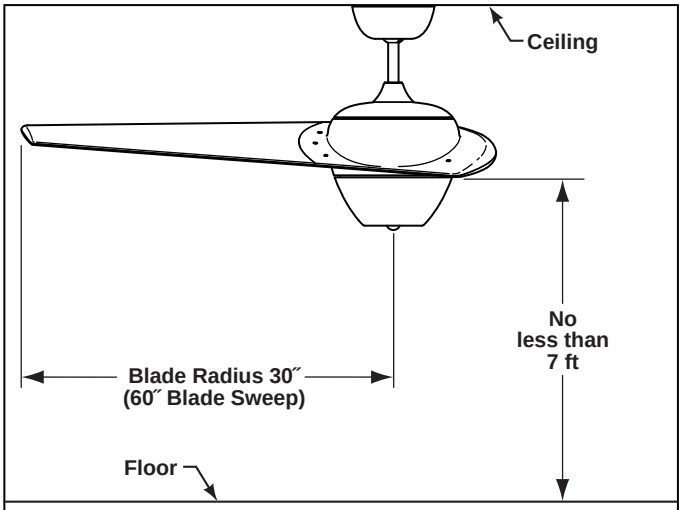

Figure 1

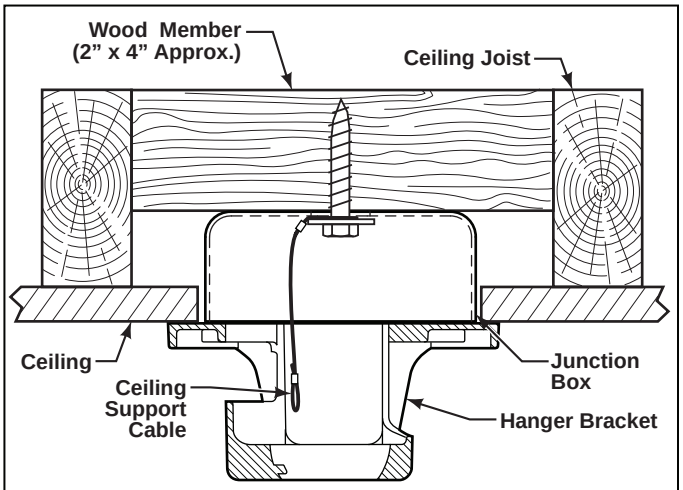

Figure 2

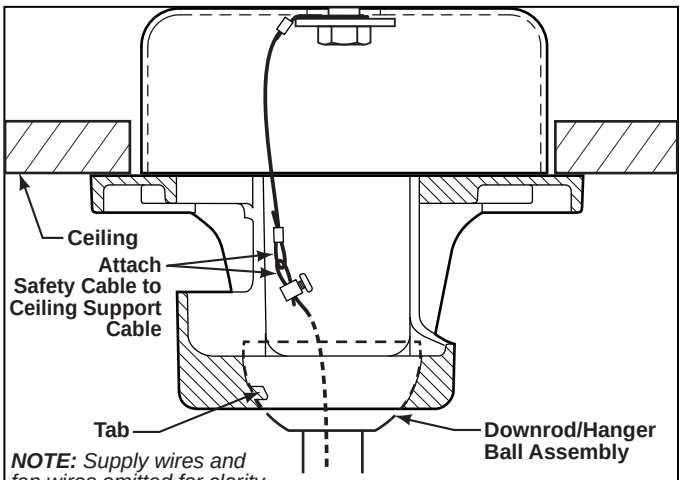

NOTE: *Supply wires and fan wires omitted for clarity*

Figure 3

⚠ WARNING

Failure to seat tab in groove could cause damage to electrical wires and possible shock or fire hazard.

⚠ WARNING

To avoid possible shock, do not pinch wires between the downrod/hanger ball assembly and the hanger bracket.

How to Wire Your Ceiling Fan - Remote Control

If you feel that you do not have enough electrical wiring knowledge or experience, have your fan installed by a licensed electrician.

⚠ WARNING

To avoid possible electrical shock, be sure electricity is turned off at the main fuse box before wiring.
NOTE: If you are not sure if the outlet box is grounded, contact a licensed electrician for advice, as it must be grounded for safe operation.

1. Setting the Code: The remote unit has 16 different code combinations. To prevent possible interference from or to other remote units such as garage door openers, car alarm or security systems, simply change the combination code in your transmitter and receiver. To set the code, perform these steps.

• **Transmitter:** remove battery cover. Press firmly below arrow and slide battery cover off. Slide code switches to your choice of up or down position. Factory setting is all up. Do not use this position. With a small screwdriver or ball point pen slide firmly up or down (Figure 1a). Replace battery cover on the transmitter.

• **Receiver:** Slide code switches to the same positions as set on your transmitter (Figure 1b).

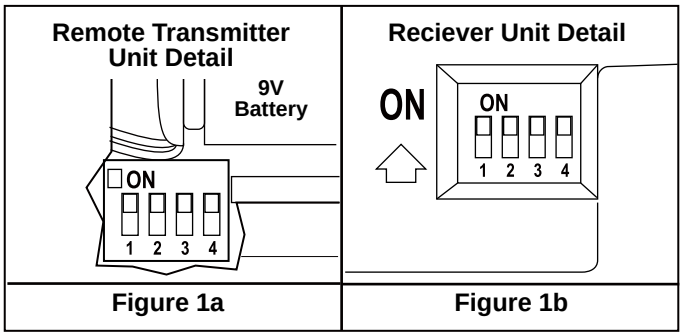

Figure 1a **Figure 1b**

NOTE: *If fan or supply wires are different colors than indicated, have this unit installed by a quali□ed electrician.*

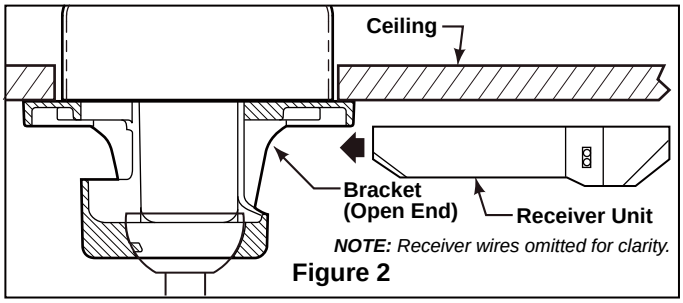

Figure 2

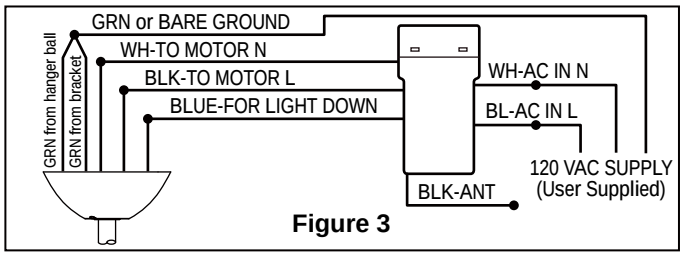

Figure 3

2. Installing Receiver in Hanger Bracket:

• Slide remote Receiver into the Hanger Bracket (Figure 2).

• Connect wires as indicated: (Figure 3)

– Green Hanger Bracket and Hanger Ball wires to BARE (ground) wire.

– BLACK Receiver Unit wire (AC IN L) to BLACK supply wire.

– WHITE Receiver Unit wire (AC IN N). to WHITE supply wire.

– WHITE Receiver Unit wire (TO MOTOR N) to WHITE fan wire.

– BLACK Receiver Unit wire (TO MOTOR L) to BLACK fan wire.

– BLUE Receiver Unit wire (FOR LIGHT DOWN) to BLUE light wire.

• Position all connected wires and receiver antenna to allow installation of ceiling canopy.

• To install ceiling canopy, see page 8.

• Restore electrical power.

Operating Instructions - Remote Control

⚠ WARNING

Check to see that all connections are tight, including ground, and that no bare wire is visible at the wire connectors, except for the ground wire. Do not operate fan until the blades is in place. Noise and fan damage could result.

1. Operating & Using Remote Transmitter (Figure 1):
Install 9 volt battery (If not using for long periods of time, remove battery to prevent damage to transmitter). Store the transmitter away from excess heat or humidity.

• HI Push Button – high fan speed
• MED Push Button – medium fan speed
• LOW Push Button – low fan speed
• OFF Push Button – fan off
• Light Push Button – no function (unless light bulb is installed)

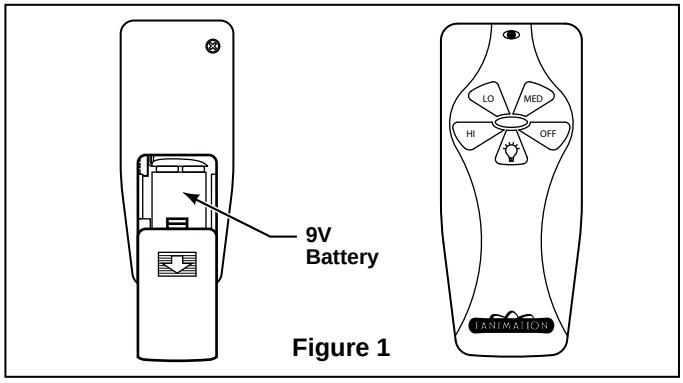

Figure 1

Installing the Canopy Housing

NOTE: *This step is applicable after the neccessary wiring is completed. (see page 7)*

⚠ WARNING

To avoid possible fire or shock, make sure that the electrical wires are completely inside the canopy housing and not pinched between the housing and the ceiling.

1. Screw in two threaded rods into the Hanger Bracket (Figure 1a).

NOTE: *The threaded rods in the hanger bracket serves as guides for easier installation.*

2. Securely attach the Canopy Housing to the Hanger Bracket using the external lockwashers and knurled knobs supplied with your fan (Figure 1b)

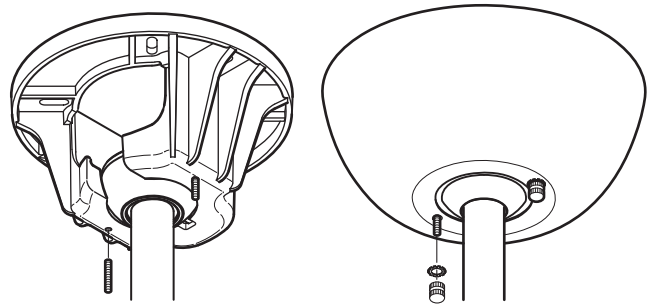

NOTE: *Supply wires and fan wires omitted for clarity*

Figure 1a **Figure 1b**

Final Assembly - Options

Light Bulb Option:

CAUTION

To avoid possible electrical shock, be sure electricity is turned off at the main fuse box before installing light bulb.

⚠ WARNING

To prevent over-heating or electrical fires, use ONLY PAR30, short-neck halogen bulb, 75 watt max, as specified (bulb not included).

1. Carefully screw the bulb in the socket firmly.
2. Restore power.

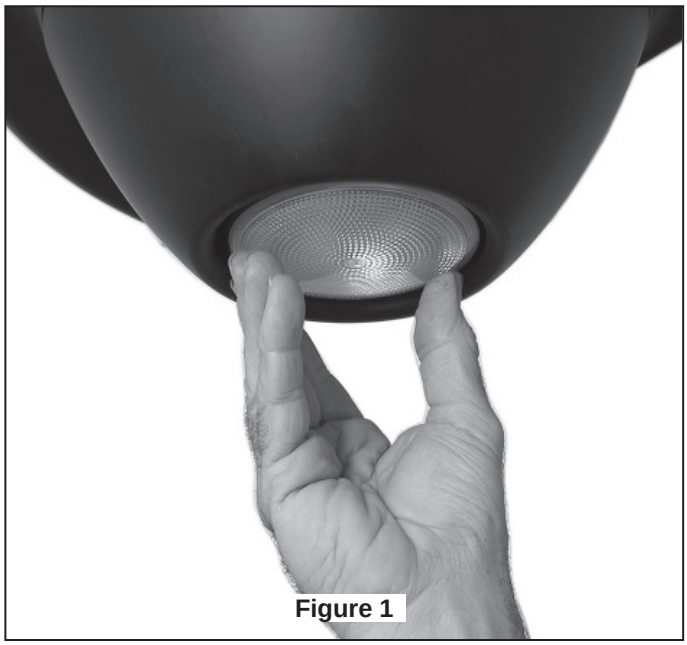

Figure 1

Lower Cap Option:

⚠ WARNING

Do NOT install lower cap while the ceiling fan is on!

1. To install lower cap - screw in lower cap into bulb socket until tight. (Figure 3)
3. Restore power.

Figure 2

Maintenance

Periodic cleaning of your new ceiling fan is the only maintenance that is needed. When cleaning, use only a soft brush or lint free cloth to avoid scratching the finish. Abrasive and/or non-abrasive cleaning agents are not required and should be avoided to prevent damage to finish.

CAUTION

Do not use water when cleaning your ceiling fan. It could damage the motor or the finish and create the possibility of electrical shock.

Trouble Shooting

⚠ WARNING

For your own safety turn off power at fuse box or circuit breaker before trouble shooting your fan.

Trouble	Probable Cause	Suggested Remedy
1. FAN WILL NOT START	**1.** Fuse or circuit breaker blown. **2.** Loose power line connections to the fan, or loose switch wire connections in the switch housing. **3.** Dead battery in remote control.	**1.** Check main and branch circuit fuses or circuit breakers. **2.** Check line wire connections to fan and switch wire connections in the switch housings. **CAUTION: Make sure main power is turned off !** **3.** Replace with fresh battery.
2. FAN SOUNDS NOISY	**1.** Motor noise caused by solid state variable speed control.	**1.** Some fan motors are sensitive to signals from solid-state variable speed controls. Solid-state controls are not recommended, choose an alternative control method.
3. FAN WOBBLES EXCESSIVELY	**1.** Setscrew in downrod support is loose. **2.** Setscrew in downrod/hanger ball assembly is loose. **3.** Hanger bracket and/or ceiling outlet box is not securely fastened.	**1.** Tighten both setscrews securely in downrod support. **2.** Tighten the setscrew in the downrod/hanger ball assembly. **3.** Tighten the hanger bracket screws to the outlet box, and secure outlet box.

Parts List

Model #FP2120**

Ref. #	Description	Part #
1	Hanger Bracket	APG610BL
5	Ceiling Canopy	P2100**
2	*Downrod/Hanger Ball Assembly Containing:*	ADR1-6 **
2a	Hanger Ball Assembly	
2b	Downrod	
2c	Clevis Pin	
2d	Hairpin Clip	
3	Ceiling Canopy	PG158**
4	Motor Coupling Cover	AP60030**
5	Ceiling Fan Assembly	AMA2120**
6	Lower Cover Assembly	AP2101**
7	Lower Cap	P2120**
8	*Hardware Bag Containing:*	HDWFP2120
	5/32” Threaded Rods (2)	
	5/32” External Lockwashers (2)	
	Knurled Knobs (2)	
	Wire Connectors (3)	
	Support Cable Bag Containing:	
	Ceiling Support Cable	
	Cable Clamp	
	Flat Washer	
	⅜” x 2” Lag Bolt	
9	Receiver Unit	RECAN34
10	Transmitter Remote	TR4

***Insert FINISH CODES (Refer to fan model number located on downrod support)*

Before discarding packaging materials, be certain all parts have been removed

How To Order Parts

When ordering repair parts, always give the following information:

- Part Number
- Part Description
- Fan Model Number

Contact your retail store for repair parts.

Enigma® FP2120**

Exploded-View

NOTE: *The illustration shown is not to scale or its actual configuration may vary. Wires partially removed for clarity.*

Figure 1

10983 Bennett Parkway
Zionsville, IN 46077
(888) 567-2055
FAX (866) 482-5215
Visit Our Website @ www.fanimation.com

Copyright 2010 Fanimation

2010/02