INTERMATIC®

SPRING WOUND INTERVAL TIMER

INSTALLATION INSTRUCTIONS:

This spring wound timer is as easy to install as a light switch in a standard 2-1/2 inch deep vertically installed junction box in place of (or to replace) a standard single pole, 3-way or double pole single throw (depending on timer model) wall switch. This spring wound timer will automatically turn off lights, fans, air conditioners and other loads after a preset timing period.

CAUTION: This timer should not be used in precision timing applications where inaccurate timing could have dangerous consequences (i.e. sun lamps, sauna, etcetera).

INSTALLATION:

Depending on the type of spring wound timer you have, you may need to supply a standard single or multi-gang wall switch plate with either a toggle opening or a decorator type opening. If your timer is supplied with a metal time dial wall switch plate (models with FF prefix), see illustration "A". If your timer is supplied with a small ivory, white or other colored plastic time dial plate (models with FD prefix), you will need to supply a standard toggle or decorator design wall switch plate and see illustration "B1" or "B2".

1. Be sure to turn off electrical power at breaker or fuse panel for safety during installation.
2. Remove wall plate and disconnect switch from vertically installed junction box.
3. Strip end of wires 1/2 inch long as per strip gauge on back of timer.

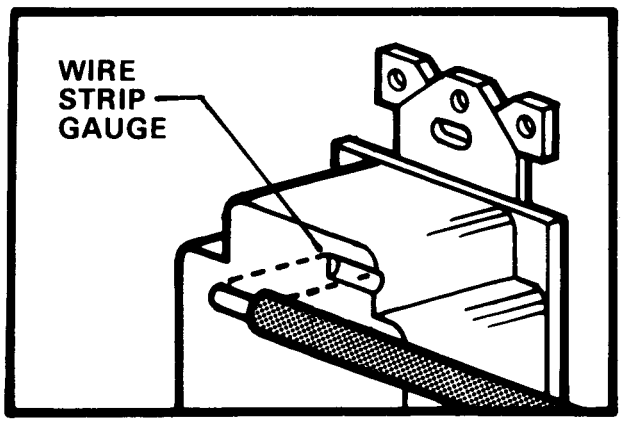

4. Insert stripped end of wires under the pressure plate of terminal screws on the side of timer (terminal screws provided in plastic bag). SCREW DOWN TIGHTLY.

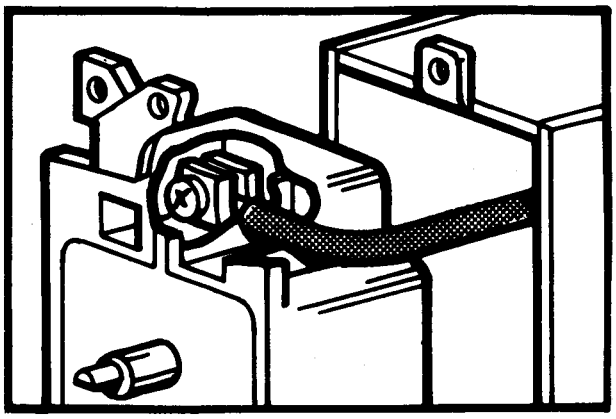

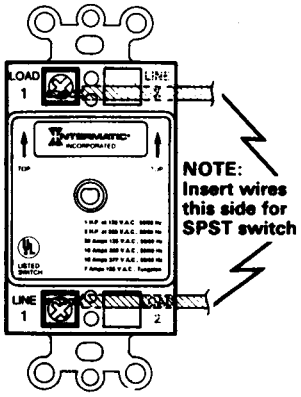

5. Insert wired timer into a 2-1/2 inch deep standard wall junction box with "TOP" (indicated on front of timer) in proper position and fasten timer to junction box using the two long flat head screws provided.

"FF" Models Only (See illustration "A")

6. Slip metal time dial plate over threaded extension with **"OFF"** mark of time dial plate on top as marked on front of timer (see illustration "A").
7. Fasten metal dial plate securely to timer with stamped nut provided (see illustration "A").

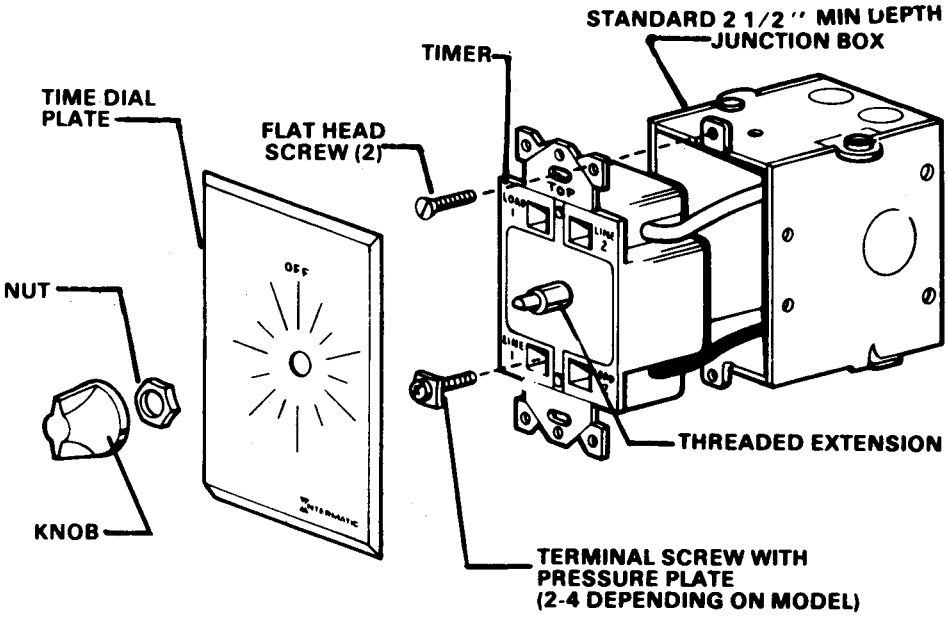

ILLUSTRATION A

"FD" Models Only (Illustration B1 and B2)

8. Illustration "B" - Place standard toggle or decorator plate on timer. do not over tighten.

   NOTE:

   If you are using a standard toggle switch plate, illustration B1, it is not necessary to use the two screws provided with the switch plate. The nut provided with the timer will securely hold the switch plate. The screws, if used, must be self-tapped into the timer body and will require a gentle inward pressure while turning the screw firmly in order to self-tap into the timer body. If using a decorator style wall switch plate, illustration B2 threaded holes are provided in the metal tabs at the opposite ends of the timer. Fasten the decorator style plate using the two screws provided with the switch plate, but **do not over tighten.**

9. Slip plastic time dial plate over threaded extension with **"OFF"** mark of time dial plate on top as marked on front of timer and fasten securely to timer with nut provided. **DO NOT OVER TIGHTEN.** (See illustration "B").

ILLUSTRATION B1

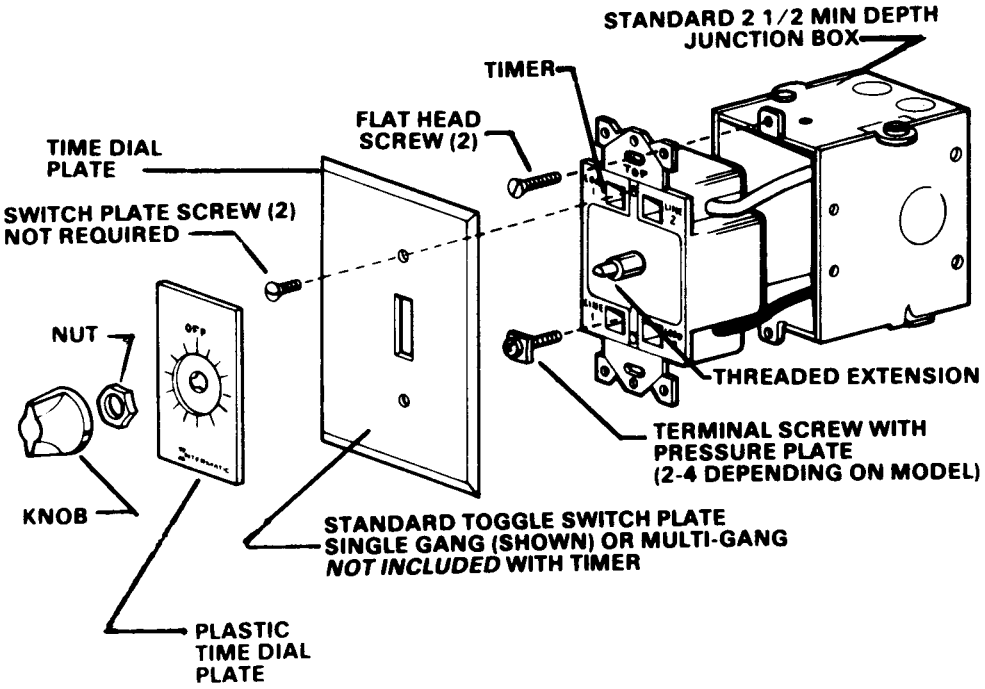

ILLUSTRATION B2

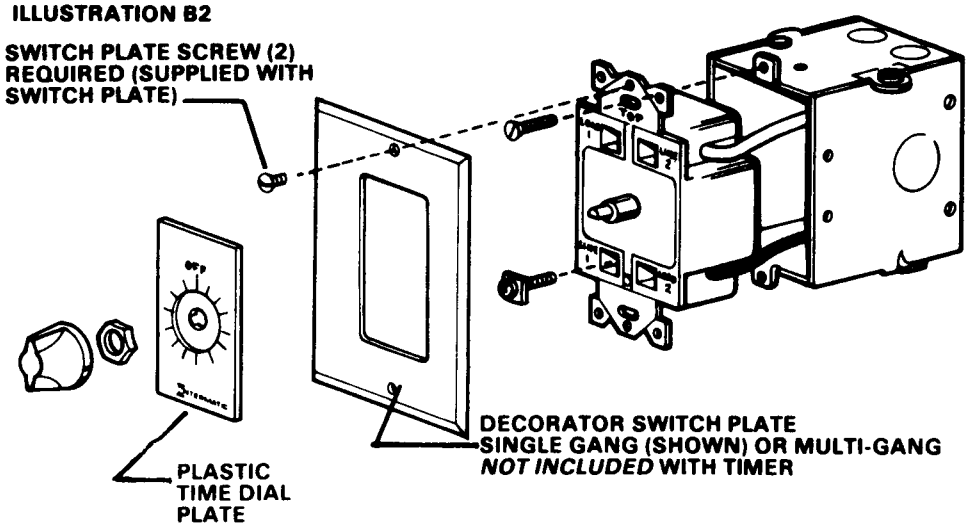

10. Push knob on timer shaft so knob pointer centers on **"OFF"** on dial plate. The knob has a "D" shaped hole which matches the "D" shaft on the timer.
11. Restore power.

HOW TO OPERATE YOUR TIMER:

FOR AUTOMATIC TIMING OPERATION: Turn timer clockwise to time desired. Timer will turn **"OFF"** load at the end of preset timed period. Note that timers (SPDT) wired for reverse action applications will turn load "ON" at end of preset timing period.

TO BYPASS TIMER: (Models with **"hold"** feature **only**) - Turn **counterclockwise** to stop. At this position, timer does not operate, but switch is **"ON"** until knob is manually returned to **"OFF"**.

APPLICATIONS:

The variety of pole configurations available allow Intermatic spring wound timers to be used for many applications as detailed to follow:

SPST

Used to break the hot side of any 120 volt load such as:

- Coffee Pots
- Air Conditioners
- Lighting
- Ventilating Fans

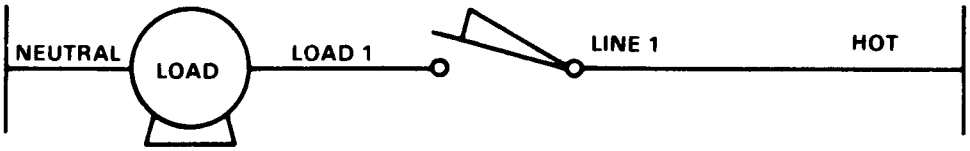

SPDT

For applications requiring 3-way switching (2 timers or timer and 3-way switch) or reverse action applications. Reverse action applications allow a load to be turned **"OFF"** for a limited time, after which the load will switch back **"ON"**. Three way applications are used for controlling a load from two different locations such as:

- Hallways
- Corridors
- Self-storage Facilities
- Upper Level/Lower Level

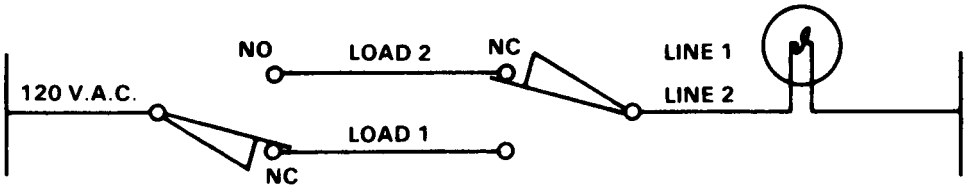

3-Way Switching

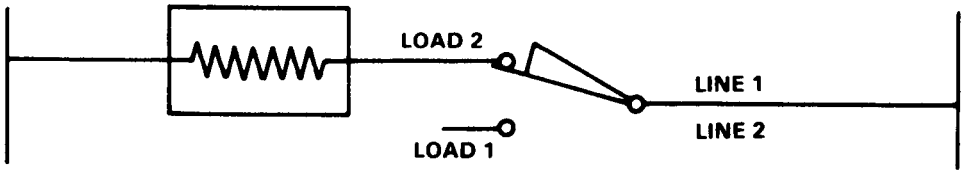

Reverse Action Switching

DPST

For applications where both sides of a 208, 240 or 277 volt load must be switched. Applications such as:

- Large Horse Power Motors
- Pumps
- Indoor Lighting
- Outdoor Lighting

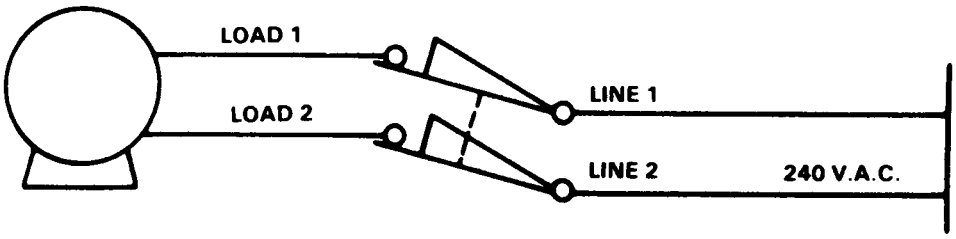

SWITCH RATING SPECIFICATIONS:

1 H.P. at 125 V.A.C. 50/60 Hertz
2 H.P. at 250 V.A.C. 50/60 Hertz
20 Amps 125 V.A.C. 50/60 Hertz
10 Amps 150 V.A.C. 50/60 Hertz
10 Amps 277 V.A.C. 50/60 Hertz
7 Amps 125 V.A.C. Tungsten

The following models are currently available:

MAXIMUM TIME CYCLE	MODEL # w/o HOLD		MODEL # w/HOLD
		SPST	
5 min	FF5M		FF5MH
15 min	FF15M		FF15MH
30 min	FF30M		FF30MH
60 min	FF60M		FF60MH
6 hr	FF6H		FF6HH
12 hr	FF12H		FF12HH
		SPDT	
2 hr	FF32H		FF32HH
4 hr	FF34H		FF34HH
6 hr	FF36H		FF36HH
12 hr	FF312H		FF312HH
		DPST	
6 hr	FF46H		FF46HH
12 hr	FF412H		FF412HH

Change prefix to "FD" for decorator style ivory colored time dial and knob. Add "W" suffix for "white" colored decorator style time dial and knob.

For further information, see your local electrical distributor or contact Intermatic directly and request form FD/FF.

FULL ONE YEAR WARRANTY

If within one (1) year from the date of purchase, this product fails due to a defect in material or workmanship, Intermatic Incorporated will repair or replace it free of charge.

The warranty does not apply to: (a) damage caused by accident, abuse, mishandling, dropping; (b) units which have been subject to unauthorized repair, opened, taken apart; (c) units not used in accordance with directions, (d) damages exceeding the cost of the product. Some states do not allow a limitation of damages, so the foregoing limitation may not apply to you. This warranty gives you specific legal rights, and you may also have other rights which vary from state to state.

This warranty service is available by either (a) returning the product to the dealer from whom the unit was purchased, or (b) mailing postage prepaid to the nearest authorized service station listed below. Please be sure to wrap the product securely when mailing to avoid shipping damage. This warranty is made by Intermatic Incorporated, Intermatic Plaza, Spring Grove, Illinois 60081-9698.

AUTHORIZED SERVICE STATION
INTERMATIC INCORPORATED
4720 West Montrose Avenue
Chicago, Illinois 60641

INTERMATIC INCORPORATED
SPRING GROVE, ILLINOIS 60081-9698
158MT7677 **PRINTED IN U.S.A.**