# PRODUCT SPECIFICATIONS

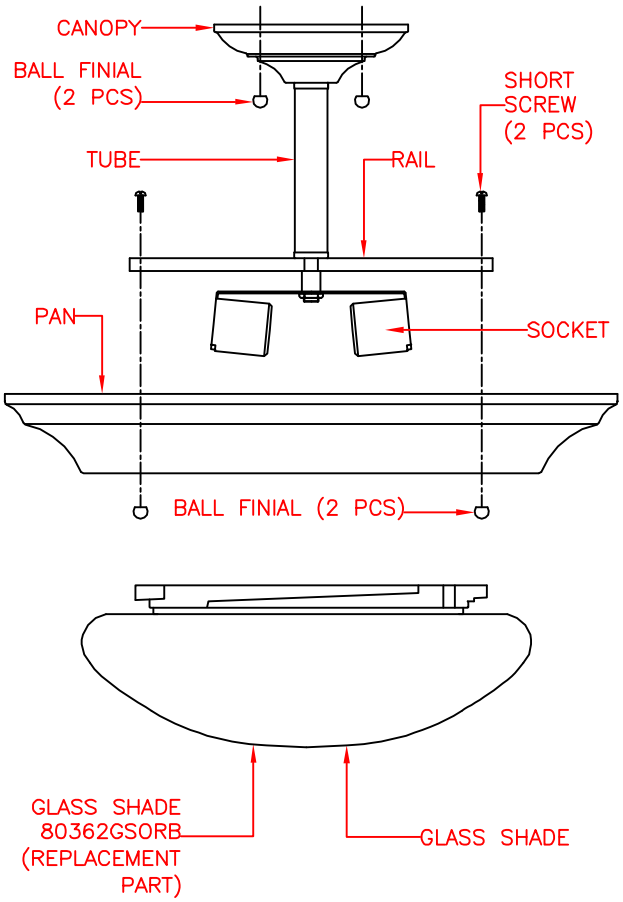


AVAILABLE PART IS:
80362GSORB (GLASS SHADE)

## OVERALL ASSEMBLED DIMENSIONS

HEIGHT: 22.8 CM (11–3/8"), DIA: 42.2 CM (16–5/8").

- **2 LIGHTS:** UL LISTED. 100 WATT. MEDIUM BASE E–26 CERAMIC SOCKET.
- **CANOPY:** PAINTED METAL, 13.4 CM (5–1/4") DIA. x 4 CM (1–5/8") HEIGHT. (2) HOLES IN CANOPY FOR MOUNTING SCREWS TO PASS THROUGH. SHAPED AS SHOWN.
- **TUBE:** PAINTED METAL, 2.2 CM (7/8") DIA. TUBING, 12 CM (4–3/4") LENGTH, SHAPED AS SHOWN.
- **RAIL:** PAINTED METAL, 1.6 CM (5/8") LENGTH x 0.8 CM (3/8") WIDTH QUADRATE TUBING, 25 CM (9–7/8") LENGTH, SHAPED AS SHOWN.
- **PAN:** PAINTED METAL, 42.2 CM (16–5/8") DIA. x 5.5 CM (2–1/8") HEIGHT.
- **GLASS SHADE:** PAINTED WHITE GLASS SHADE, 31.6 CM (12–1/2") DIA. x 11 CM (4–3/8") HEIGHT. SHAPED AS SHOWN. GLASS SHADE SHOULD FIT SNUGLY AND STRAIGHT WHEN ATTACHED.
- **SUPPLY WIRE:** UL LISTED. 18 AWG, 105°C, MUST EXTEND A MINIMUM OF 15.2 CM (6") PAST CENTER OF CANOPY. BLACK AND WHITE WIRE. WIRES MUST BE LEAD FREE.
- **LABELS:** UL, CSA OR CUL, MANUFACTURING DATE, MODEL # AND COUNTRY OF ORIGIN LABELS PROVIDED IN CANOPY. RELAMPING LABEL FOR 100 WATT MAX. TYPE "A" BULB PROVIDED ON SOCKET.

## PACKAGING AND SHIPPING DETAILS

- THE FIXTURE IS DISASSEMBLED FOR SHIPPING. EACH PIECE IS PACKED IN IT'S OWN CARDBOARD CARTON.
- HARDWARE PACK #004 IS PROVIDED. ALL PARTS SHOULD BE SECURED SO THEY CAN NOT MOVE DURING SHIPPING.
- THE CARTON IS MADE OF A DOUBLE WALL CORRUGATED CARDBOARD "A MA A". BROWN IN COLOR. THE INNER PACKING IS DIE–CUT CARDBOARD OR STYROFOAM SUFFICIENT TO PROTECT AND SECURE THE FIXTURE AND MUST PASS THE FEDEX DROP TEST REQUIREMENTS.
- EACH CARTON SHALL BE PRINTED WITH A LINE DRAWING AND THE KENROY HOME NAME AND LOGO, MODEL NUMBER, SKU NUMBER AND FINISH, EACH CARTON SHALL BE PROVIDED A UPC LABEL. THE UPC BAR CODE AS FOLLOWS: ORB=053392098711.

## OTHER DETAILS

- ALL METAL PARTS MUST MATCH FINISH UNLESS OTHERWISE SPECIFIED.
- MODEL 80363ORB INSTALLATION INSTRUCTIONS ARE TO BE PACKED WITH FIXTURE, AND BE PRINTED CLEARLY ON QUALITY PAPER.
- ALL BAGS MUST BE LABELED WITH OFFICIAL "THIS BAG IS NOT A TOY" STATEMENT.
- ASSEMBLY TIME: 5 MINUTES.
- DIMS OF UNIT BOX: 45.7 CM (18") LENGTH x 45.7 CM (18") WIDTH x 28.6 CM (11–1/4") HEIGHT.
- DIMS OF MASTER BOX: 94 CM (37") LENGTH x 47.6 CM (18–3/4") WIDTH x 61 CM (24") HEIGHT. (4 PCS/CTN)
- NET WEIGHT (UNIT): 6.4 LBS. GROSS WEIGHT (UNIT): 10.2 LBS.
- NET WEIGHT (MASTER): 25.8 LBS. GROSS WEIGHT (MASTER): 43 LBS. (4 PCS/CTN)
- THE UL NUMBER IS E127416.


KENROY HOME
11660 CENTRAL PARKWAY
JACKSONVILLE, FL. 32224
PHONE: 904–642–4340
FAX: 904–642–4150



THIS DOCUMENT AND THE INFORMATION THAT IT DISCLOSES IS THE EXCLUSIVE PROPERTY OF KENROY HOME. ANY REPRODUCTION OR USE OF THIS DRAWING IN PART OR IN WHOLE, WITHOUT THE EXPRESS CONSENT OF THE PROPRIETOR IS PROHIBITED. © 2008 KENROY HOME.


| | | | | |
|---|---|---|---|---|
| DATE: 7/16/2008 | SCALE: NONE | DRAWN BY: JAMES | REVISION DATE: | MODEL #: 80363 |
| REFERENCE: DICKENS 2LT. SEMI FLUSH | | APPROVAL: | REVISION DATE: | FINISHES: ORB |
| | | | REVISION DATE: | PAGE: 1 OF: 1 |