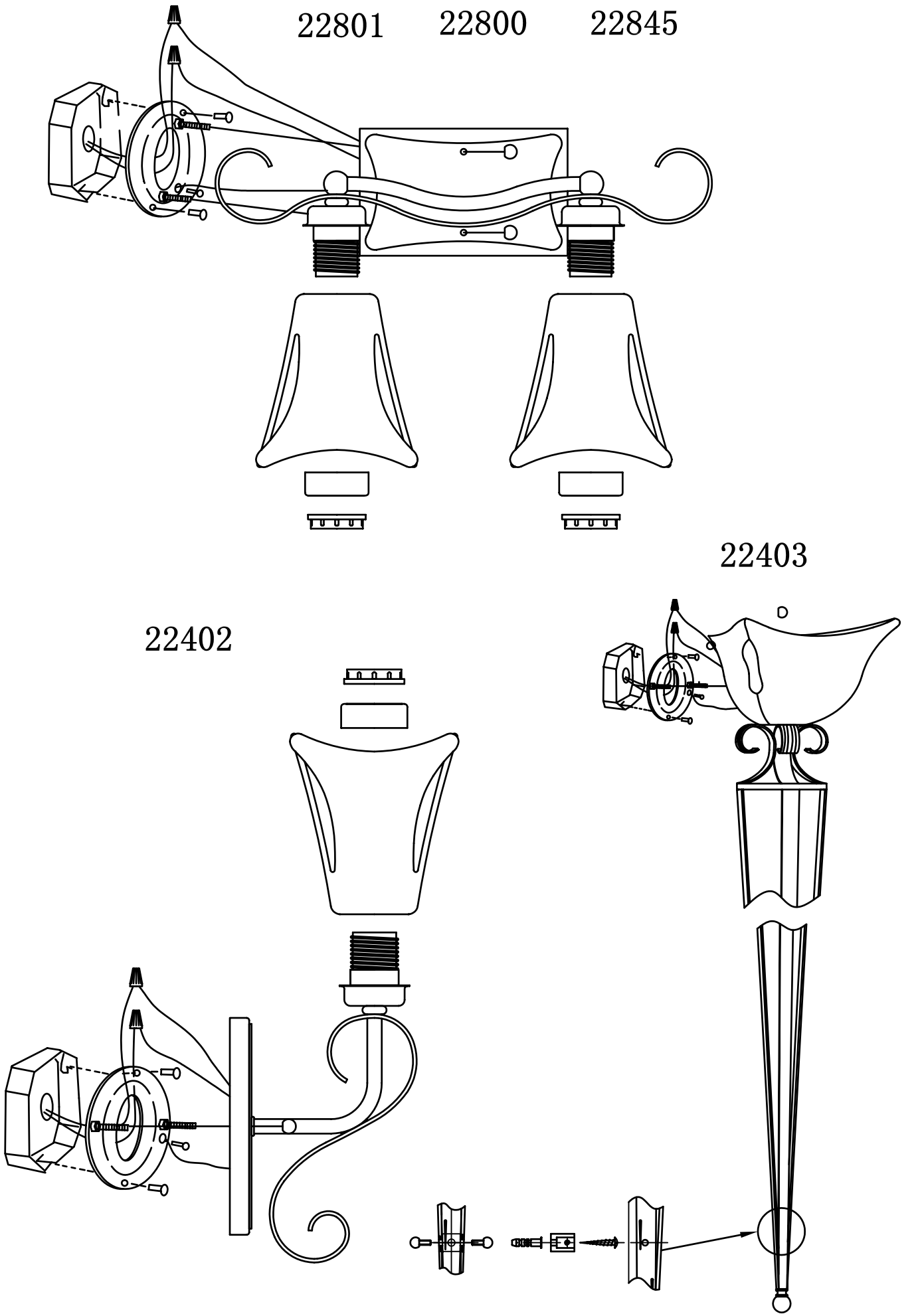

CSA007604VAUT1

INSTALLATION INSTRUCTIONS.

PLEASE READ CAREFULLY AND SAVE THESE INSTRUCTIONS, AS YOU MAY NEED THEM AT A LATER DATE.

CAUTION – Turn off the main power at the circuit breaker before installing the fixture, in order to prevent possible shock.

Remove the fixture and the mounting package from the box and make sure that no parts are missing by referencing the illustrations on the installation instructions.

FOR WALL MOUNT (Fig. 1 & 2)

1.A) Place the #8-32 HEX NUTS (5.) onto the #8-32 FIXTRUE MOUNTING SCREWS (7.), and attach the FIXTURE MOUNTING SCREWS to the MOUNTING BRACKET (4.), or universal mounting plate (whichever is provided). Do not tighten the HEX NUTS at this time. (Fig.4)

B) If the fixture uses a single 1/8" IPS NIPPLE (7.) for mounting, thread the 1/8" IPS HEX NUT (5.) onto the NIPPLE, and screw the NIPPLE into the MOUNTING BRACKET (4.), without tightening the HEX NUT. (Fig.2)

2.Pull the power supply wires out from the OUTLET BOX (3.), and mount the MOUNTING BRACKET (4.) or the universal mounting plate to the OUTLET BOX, using MOUNTING SCREWS (6.)

3. Attach the power supply wires to the fixture lead wires by connecting BLACK to BLACK (or SMOOTH), and WHITE to WHITE (or RIBBED). Attach the POWER SUPPLY GROUND WIRE (11.) from the OUTLET BOX (3.), and the FIXTURE GROUND WIRE (12.) from the fixture to the green GROUND SCREW (13.) on the MOUNTING BRACKET (4.), or, connect both wires together using the correct size of wire connectors.

4.Place the CANOPY (14.) on the fixture over the OUTLET BOX (3.) and onto the fixture mounting screws [or NIPPLE (7.)], and adjust the #8-32 fixture mounting screws (or NIPPLE) until they protrude out from the CANOPY 1/4". Remove the CANOPY and secure the position of the fixture mounting screws (or NIPPLE) by tightening the HEX NUT (S) (5.) against the MOUNTING BRACKET (4.). Place the CANOPY back onto the fixture mounting screws, (or NIPPLE), and secure into place using the DECORATIVE NUTS (15.) provided.

5.Screw the TALL SECTION (17.) (if provided) onto the COUPLING (18.) located at the bottom of the lamp compartment.

6.Screw in light bulbs that do not exceed the maximum wattage specified on the fixture's wattage rating label, into the socket located inside the lamp compartment. Place the lamp cover onto the top of the lamp compartment, and secure in position using the decorative head screws provided.

INSTALLATION COMPLETED

FOR POST MOUNT (Fig. 3)

1.Place the fixture on the top of the POST (9.) on which the fixture is to be mounted and position as desired. Using the holes located on the POST CAP (3.) mark the hole position on the POST. Remove the fixture from the POST and drill a 1/8" diameter hole at each marked position on the POST.

2.Pull the power supply wires out from the POST (9.) and the fixture lead wires out from the POST CAP (3.), and attach the wires together by connecting BLACK to BLACK (6.) and WHITE to WHITE (5.). Attach the POWER SUPPLY GROUND WIRE (7.) to the FIXTURE GROUND WIRE (8.) using a wire connector rated for the size of wires being connected.

3.Place the connected wires down inside the POST (9.), and mount the POST CAP (3.) in place, aligning the holes in the POST CAP with the ones on the POST. Secure the POST CAP to the POST using #10X1/2" long self-tapping SHEET METAL SCREWS (4.) provided.

4.Screw a light bulb that does not exceed the maximum wattage specified on the fixture's wattage rating label, into the lamp socket. Place the LAMP COVER (1.) onto the top of the lamp compartment, and secure in position using the DECORATIVE HEAD SCREWS (2.) provided.

INSTALLATION COMPLETED

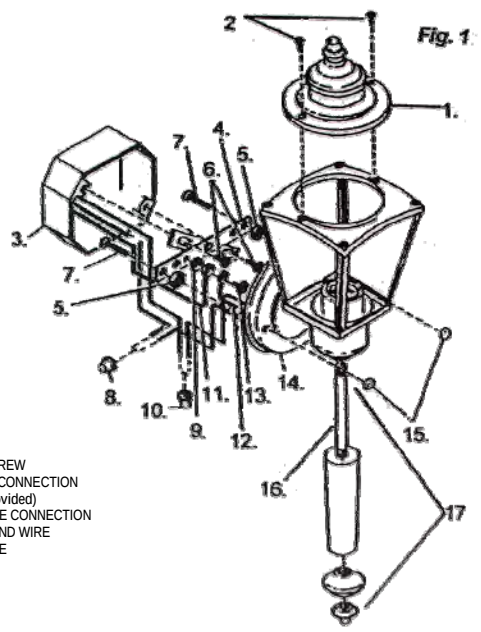

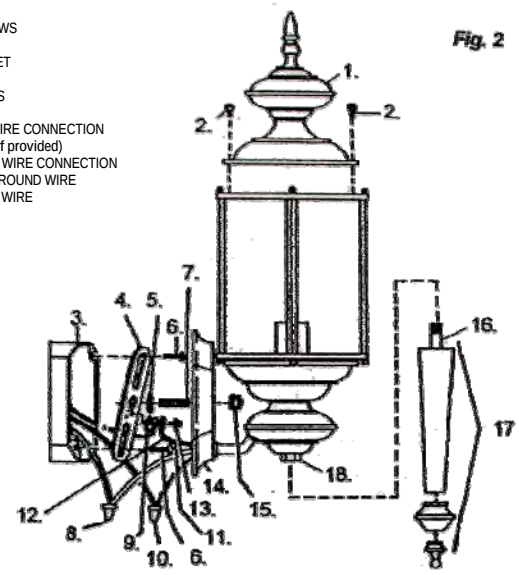

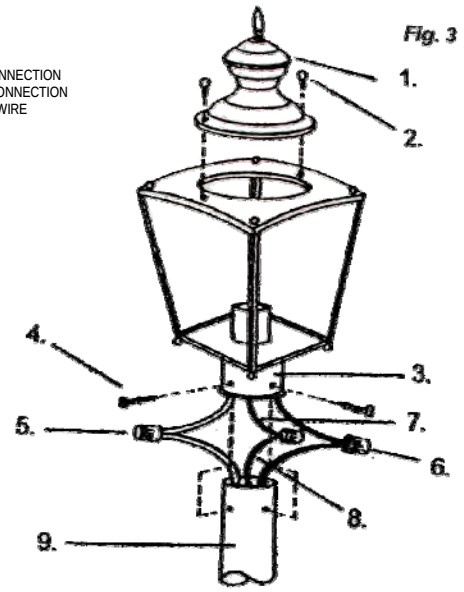

CST002