IllumaTech™ Preset Lighting Controls

APPLICATION

Leviton's IllumaTech™ Preset Multi-Location Slide Controls feature a smooth, captured slide bar action for fine adjustment of lighting levels. An easy-to-use pushbutton with locator LED provides preset ON/OFF switching. To simplify inventory, IllumaTech preset is designed for both single-pole (one-location preset) and 3-way (multi-location) applications. Color change kits also simplify inventory by diminishing the need for stocking separate devices in every color. The IllumaTech preset line includes incandescent, magnetic and electronic low-voltage and electronic fluorescent lighting controls, as well as full-range and quiet fan speed controls.

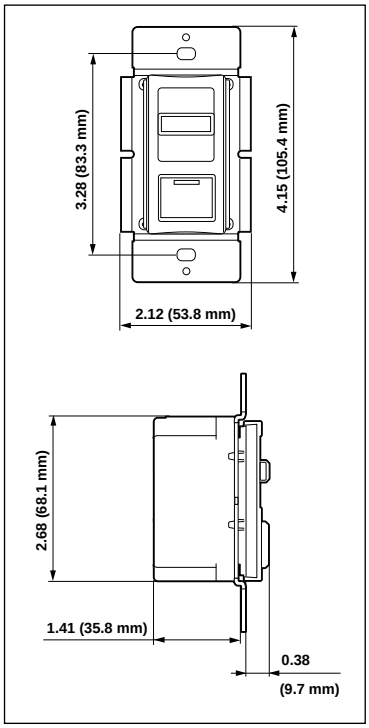

Cat. No. IPI06 Preset

FEATURES

- UL Listed (File # E-31373)
- CSA Certified (File # LR-3413)
- Decora styling coordinates with traditional and contemporary interiors.
- Fluid slide movement allows fine adjustment of light level with minimal effort.
- Captured, wrap-around slide bar stays in place and cannot fall off during use.
- Preset push ON/OFF switch is universally designed for easy action, accommodating use by people of all ages and abilities.
- Locator LED is illuminated when load is OFF (600W is available without illumination). Direct positioning of LED on Preset switch makes it easy to find switch in dark rooms.
- Preset versions provide single-pole (one location) and 3-way (multi-location) control when used with a standard 3-way ON/OFF switch.
- Power failure recovery feature ensures retention of last setting before power interruption.
- Quiet 1.5 amp fan speed controls are ideal for libraries, study rooms and areas where ceiling fan noise may be distracting. Full-range 5 amp fan speed controls are also available.
- Built-in radio/TV interference filter.
- Use with Leviton DPSPE-112 Power Extender to extend load capacity to 2000W (2000VA) for 120V incandescent, magnetic low-voltage and Advance Mark X™ fluorescent dimming ballasts.
- Use with Leviton DPSPE-212 Power Extender to extend load capacity to 120V 2000VA for Advance Mark VII™ and OSRAM Sylvania Quicksonic Helios™ fluorescent ballasts.
- Compatible with Decora screwless and standard Decora wallplates.
- Available in ivory, white and almond.
- Snap-on color change kits in ivory, white, almond, black, brown and gray allow color changes on any device, simplifying stocking inventory.
- Color change kits feature a self-aligning mechanism that automatically connects to internal slider.

STANDARDS SPECIFICATIONS

Leviton Multi-Location Preset Slide Dimmer Controls shall be UL Listed with Limited Two-Year Warranty, fluid slide movement, captured wrap-around slidebar, failure recovery and Locator LED that illuminates when load is OFF. Preset Version shall have single-pole and 3-way wiring capability (when used with 3-way switch). Device shall have Color Change Kits for economical color changeovers. Available in ratings and colors as scheduled on plan.

LEVITON SPECIFICATION SUBMITTAL

JOB NAME:	CATALOG NUMBERS:	
JOB NUMBER:		

Leviton Mfg. Co., Inc. 59-25 Little Neck Pkwy • Little Neck, NY 11362 • Phone: (800) 323-8920 • Fax: (800) 832-9538

IllumaTech

IllumaTech™ Preset Slide Controls —
Single Pole and 3-Way, with LED Locator
All IllumaTech Preset Dimmers provide single-pole (one location) and 3-way (multi-location) control when used with a 3-way switch.

DESCRIPTION	CAT. NO.	RATING	COLOR CHANGE KIT*
IllumaTech Incandescent	IPI06-1LW	600W 120V AC 60 Hz	W, I, A, G, E, B
IllumaTech Incandescent (no LED locator)	IPI06-10W	600W 120VAC 60 Hz	W, I, A, G, E, B
IllumaTech Incandescent	IPI10-1LW	1000W 120VAC 60 Hz	W, I, A, G, E, B
IllumaTech Electronic Low-Voltage	IPE04-1LW	400VA (300W) 120V AC 60 Hz	W, I, A, G, E, B
IllumaTech Magnetic Low-Voltage	IPM06-1LW	600VA (450W) 120V AC 60 Hz	W, I, A, G, E,B
IllumaTech Magnetic Low-Voltage	IPM10-1LW	1000VA (750W) 120V AC 60 Hz	W, I, A, G, E, B
IllumaTech Advance Mark X™ Fluorescent Dimming Ballast	IPX06-1LW	600VA (450W) 120V AC 60 Hz	W, I, A, G, E, B
IllumaTech Advance Mark X™ Fluorescent Dimming Ballast	IPX10-1LW	1000VA (750W) 120V AC 60 Hz	W, I, A, G, E, B
IllumaTech Advance Mark X™ Fluorescent Dimming Ballast	IPX06-7LW	600VA (450W) 277V AC 60 Hz	W, I, A, G, E, B
IllumaTech Advance Mark X™ Fluorescent Dimming Ballast	IPX12-7LW	1200VA (900W) 277V AC 60Hz	W, I, A, G, E, B
IllumaTech Advance Mark VII 0-10V and OSRAM Sylvania Quicksonic Helios Fluorescent Dimming Ballast	IP710-DLW	1200VA (900W) 120V AC 60Hz; 1500VA (1200W) 277V AC 60Hz	W, I, A, G, E, B
IllumaTech Quiet Fan Speed Control	IPF01-1LW	1.5 Amps 120V AC 60 Hz	W, I, A, G, E, B
IllumaTech Fan Speed Control	IPF05-1LW	5 Amps 120V AC 60 Hz	W, I, A, G, E, B
IllumaTech Color Change Kit	IPKIT-00W	——	W, I, A, G, E, B
IllumaTech Color Change Kit for Quiet Fan Speed Control	IPQFK-00W	——	W, I, A, G, E, B

Available in Ivory (-I), White (-W) and Almond (-A) for the retail market; White (-W) only for distributors. For other colors, order Color Change Kits and add suffix as follows: Ivory (-I), White (-W), Almond (-A), Gray (-G), Black (-E), and Brown (-B).

Performance Specifications	
Electrical	• Input 120 VAC @ 60Hz., 277 VAC @ 60Hz. • Line voltage regulation. • RFI noise suppression.
Mechanical	• Dimmer control – slide with a travel of 20mm. • Push on/off switch control. • Three wire device plus ground wire, dual-rated model is five wire device plus ground wire. • The LED will be lighted when the load off. • Separate air-gap switch is not needed.
Environmental	• Operating 0 degrees celsius to 55 degrees celsius • Non-operating –10 degrees celsius to 85 degrees celsius • Relative humidity, non-condensing 20% to 90%

Note: Sharing a neutral wire may cause flickering. Connect all dimmers to the same phase or run a separate neutral to each phase. Consult Leviton Techline if problems persist.

CAUTION ON RETROFITS: When retrofitting Mark X dimming ballasts into fixtures that originally had Instant Start ballasts, the sockets MUST be replaced with Rapid Start sockets to allow proper dimmer operation and prevent damage to the dimming ballast. Refer to the instructions provided with the ballast and the Leviton Mark X dimmer.

LEVITON SPECIFICATION SUBMITTAL

JOB NAME:	CATALOG NUMBERS:	
JOB NUMBER:		

Leviton Mfg. Co., Inc. 59-25 Little Neck Pkwy • Little Neck, NY 11362 • Phone: (800) 323-8920 • Fax: (800) 832-9538

LEVITON LIGHTING CONTROL DIVISION

Visit our Website at: www.leviton.com