HBLED INSTALLATION INSTRUCTIONS

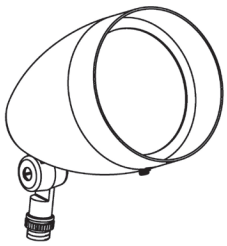

Thank you for buying RAB lighting fixtures. Our goal is to design the best quality products to get the job done right. We'd like to hear your comments. Call the Marketing Department at 888-RAB-1000, or email: marketing@rabweb.com

IMPORTANT

READ CAREFULLY BEFORE INSTALLING FIXTURE. RETAIN THESE INSTRUCTIONS FOR FUTURE REFERENCE.
RAB fixtures must be wired in accordance with the National Electrical Code and all applicable local codes. Proper grounding is required for safety. THIS PRODUCT MUST BE INSTALLED IN ACCORDANCE WITH THE APPLICABLE INSTALLATION CODE BY A PERSON FAMILIAR WITH THE CONSTRUCTION AND OPERATION OF THE PRODUCT AND THE HAZARDS INVOLVED.
WARNING: Make certain power is OFF before installing or maintaining fixture. No user serviceable parts inside.

WALL MOUNTING

Mount to a weatherproof junction box and cover plate (not supplied) as shown.

1. Thread fixture into **Cover Plate**.
2. Connect wires as shown in the wiring diagram
3. Attach cover to **Junction Box**.
4. Aim floodlight in the direction desired and tighten locknut and **Arm Screw**.

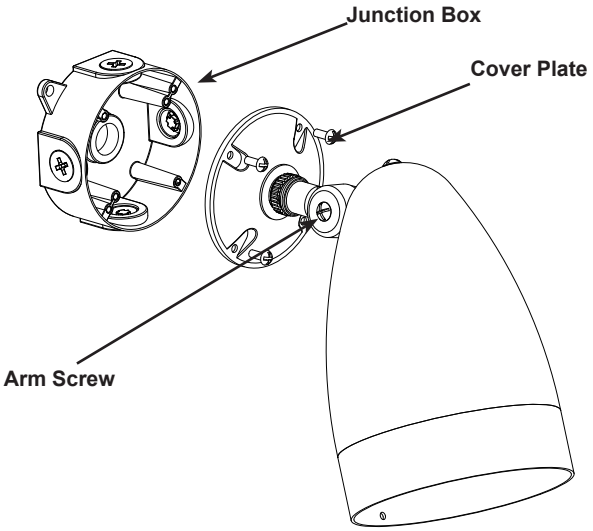

GROUND MOUNTING

Mount to a Mighty Post(RAB Cat# MP19) as shown.

1. Thread fixture into **Mighty Post Cap**.
2. Connect wires as shown in the wiring diagram and place inside the **Mighty Post**.
3. Place **Mighty Post Cap** on the **Mighty Post**.
4. Aim floodlight in the direction desired and tighten locknut and **Arm Screw**.

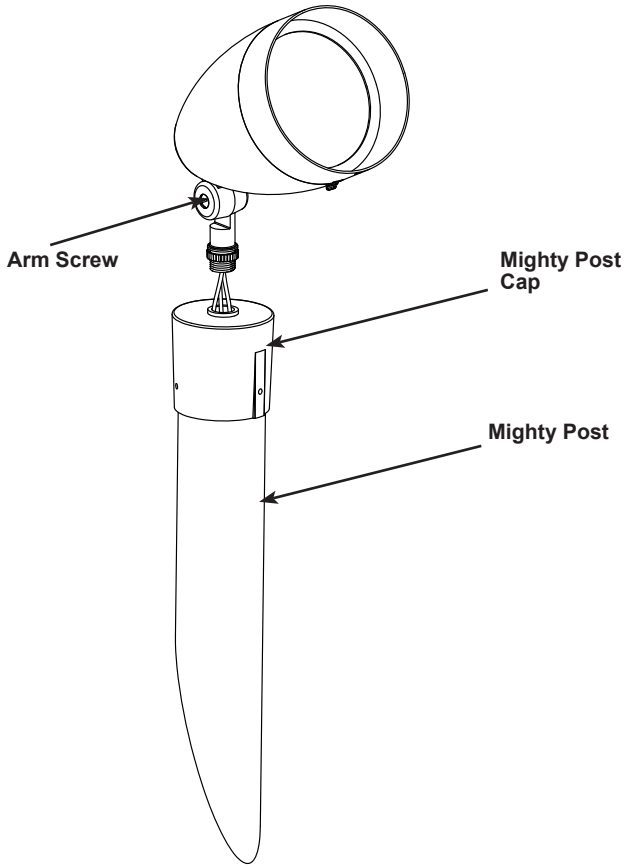

HBLED INSTALLATION INSTRUCTIONS

WIRING

Universal voltage driver permits operation at the following voltages, 50 or 60 Hz.

10W	120V thru 240V
13W	120V thru 277V

1. Connect the black fixture lead to the (+) LINE supply lead.
2. Connect the white fixture lead to the (-) COMMON supply lead.
3. Connect the GROUND wire from fixture to supply ground.

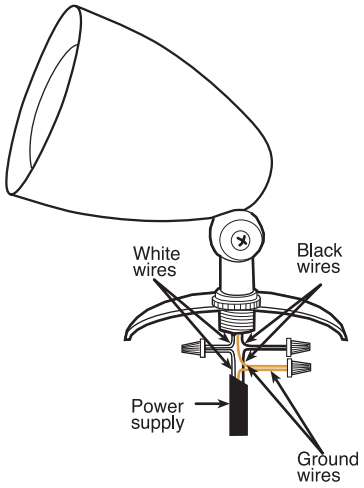

TROUBLESHOOTING

1. Check that the line voltage at fixture is correct.

10W	120V thru 240V
13W	120V thru 277V

2. Is there voltage at the lamp fixture wires? If there is no voltage, check all connections.
3. Is the fixture is grounded properly?
4. If there is a photocell, is it working properly?

Note: These instructions do not cover all details or variations in equipment nor do they provide for every possible situation during installation, operation or maintenance.

SPOT REFLECTOR INSTALLATION

HBLED comes standard with a Flood reflector installed. If a Spot distribution is preferred use the included Spot reflector installed as follows.

1. Turn off electricity to the fixture! DO NOT add reflector while fixture is on!
2. To remove hood loosen four **Hood Screws** and remove hood/lens from the fixture.
3. Place **Spot Reflector** as shown, inside the **Flood Reflector** and mount with two screws provided. The factory installed Flood Reflector stays in place, do not remove.
4. Do not touch or remove the LED.
5. Replace the hood/lens and tighten the four **Hood Screws**. **WARNING: MAKE SURE THE GASKET ON THE HOOD IS POSITIONED PROPERLY AND CREATES A WEATHER PROOF SEAL**.

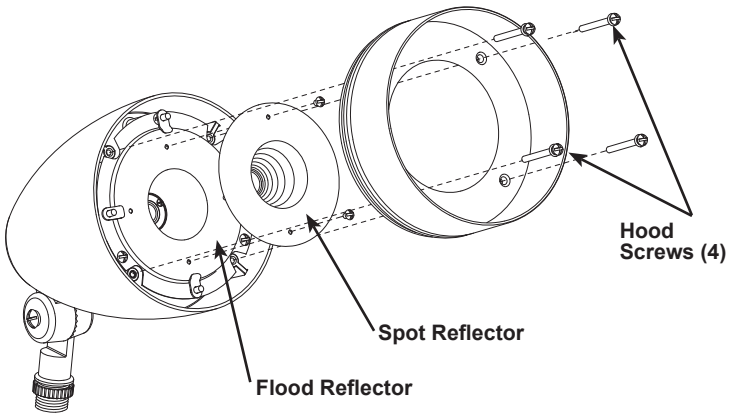

CLEANING & MAINTENANCE

CAUTION: Be sure fixture temperature is cool enough to touch. Do not clean or maintain while fixture is energized.

1. Clean glass lens & fixture with non-abrasive glass cleaning solution.
2. Do not open fixture to clean the LED. Do not touch the LED.
3. Keep leaves and debris out of hood.

©2010 RAB LIGHTING Inc.
Northvale, New Jersey 07647 USA

Easy Installation & Product Help

Tech Help Line	*Toll Free Fax*	*e-mail*	*Lightinglayouts.com*	*rabweb.com*
Call our experts	Send a fax to RAB	Answered promptly	Easy lighting layouts	Visit our website
888 RAB-1000	888 RAB-1232	sales@rabweb.com	in minutes	for product info